PSSU/A2 Control Unit
Installation Instructions

INTRODUCTION

The PSSU/A2 control unit is designed to be used with Tapeswitch pressure sensitive sensors, such as ribbon switches, sensing edges, bumpers, and presence-sensing switching mats, to form a complete safety system. A number of sensors can be connected in series.

PSSU/A FEATURES

- Automatic power on reset
- Uses standard 24-volt DC power
- Self contained ready to use
- Two selectable safety relay outputs (NO or NC)
- One selectable non-safety monitor output (NO or NC)
- All safety outputs have forced guided contacts and are cross monitored

NOTE: When the control unit is powered up and the sensor(s) is cleared, the output safety relays will energize.

SAFETY INTEGRITY

The PSSU/A2 control unit exceeds the requirements of safety integrity level 2 as defined by DIN 31006-1. This control units is self-monitoring which means that any faults in safety critical components will be detected and will render the machine inoperative until the fault is rectified.

However, the safety integrity of the system as a whole depends on the safety integrity of the sensor used, in addition to the proper installation and interface.

PRINCIPLE OF OPERATION

The control unit contains the power supply for the system, the safety output relays and the current limiting / auto reset circuit Figure 1 shows the Principle of Operation. A 24 Vdc power supply is taken from the control unit to the switching elements in the sensor(s) $+v_e$ to one conductor, $-v_e$ to the other conductor, and back to the control unit where it supplies power to the output relays. The output relays are energized when the sensor(s) is clear. When the sensor(s) is actuated, the 24 Vdc power supply to the output relays is shorted out, causing them to de-energize.

Furthermore, if the power supply to the output relays is interrupted or shorted out by a fault in the sensor(s) wiring or in the switch element, power to the output relays will be lost, and the relays will de-energize. The relays will re-energize AUTOMATICALLY once the sensor is clear and/or the fault is removed or corrected and power is applied. The output contacts are selectable to either normally-open (closed when the relay is energized) or normally-closed (open when the relay is energized). The outputs are configured as normally open when shipped from the factory and can be re-configured in the field. (See Output Contact Configuration Section)

NOTE: A machine primary control element, or MPCE, is defined as an electrically-controlled element which directly controls the normal operating motion of a machine such that it is the last (in time) to operate when motion is initiated or arrested.

INSTALLATION WARNING

Tapeswitch Safety Systems are designed to protect operators working at or near dangerous machines. They can only perform that function if they are correctly fitted and interfaced to a suitable machine. Every effort has been made to provide comprehensive and accurate information. It is the responsibility of the user to ensure that all persons involved in the installation of the product have the knowledge, training and experience necessary and that they are fully conversant with all laws, rules, regulations and codes of practice at their task.

PSSU - Control Unit Principle of Operation

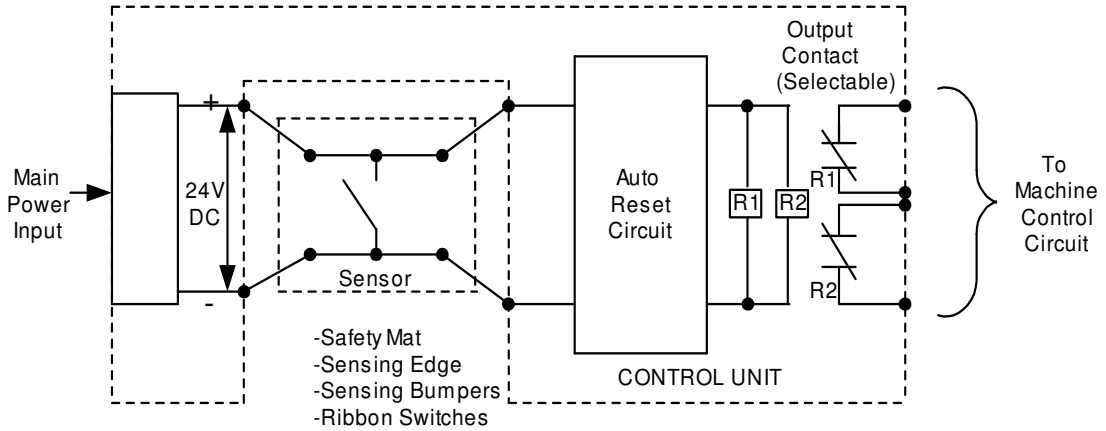

Figure 1

TAPESWITCH CORPORATION
100 Schmitt Boulevard
Farmingdale, New York 11735
Phone: 631-630-0442
Fax: 631-630-0454
www.tapeswitch.com

MECHANICAL

Figure 2 shows the enclosure size and mounting dimensions of the PSSU/A2 interface unit. The unit must be mounted in an enclosure rated for the known operating environment. In most cases, the unit will fit into an existing machine's control panel. The unit snaps onto a common electrical mounting rail, style DIN EN 50 022-35 (DIN 35MM). It can also be panel mounted using the corner mounting holes which accept two M4 or M5 (#6 or #10) screws. **Note: Leave at least 1/2" clearance for cooling on each side of the unit, next to the cooling slots.**

ELECTRICAL

GENERAL - The connections for the PSSU/A2 control unit are shown in Figure 3. Crimped ferrules should be fitted on all stranded wires. It is recommended that electrical installation be performed in the order described below.

SENSOR(S) CONNECTION - Connect the sensor cables to the control unit taking particular care that there are no stray strands which could cause a short between adjacent terminals. A number of sensors can be connected in series, see Table 2 and Figures 7-10 for detail and limitations.

POWER CONNECTION - Connect the input power to the control unit as referred to in Figure 3 and Table 1. Pay particular attention to the notes referring to jumper terminal numbers. The maximum power consumption is 6 VA.

SAFETY OUTPUT CONNECTION

Two safety outputs are provided. In low-to-medium risk applications the machine is normally provided with a single MPCE. In such cases both safety outputs should be connected in series with the MPCE coil as shown in Figure 4. If the machine is fitted with two MPCEs, one safety output should be connected in series with each MPCE coil as shown in Figure 5.

Table 1

1	Sensor D
2	Sensor C
3 & 4	Monitor Output
5 & 6	Safety Output 1
7 & 8	Safety Output 2
9	+ (24VDC)
10	Earth (Ground)
11	- (0VDC)
12	Monitor Input (Jumper if not used)
13	
14	Not Used
15	Sensor A
16	Sensor B

To protect the contacts of the safety output relays from the effects of switching inductive loads, arc suppressors should be fitted in parallel with the MPCE coils as shown in Figures 4 and 5. Arc suppressors must not be fitted across the safety relay contacts.

To protect against the possibility of both safety outputs welding closed, due to an overcurrent fault in the machine circuit, 2A fuses should be fitted in series with the MPCE coils as shown in Figure 4 and 5. This limits the current through the safety output contacts to well below that which could cause the contacts to weld.

MONITOR OUTPUT

The monitor output is a selectable normally-open (closed when the relay is energized) or normally-closed (open when the relay is energized) configuration (Form C). This output is configured normally-open when shipped from the factory. The monitor output contact is voltage free and follows the state of the safety output relays. The monitor output can be used as an input to a machine control device such as a programmable logical controller (PLC) to signal that the sensor(s) has been actuated.

NOTE: The monitor output is not a safety output and must not be used in the machine stop circuit.

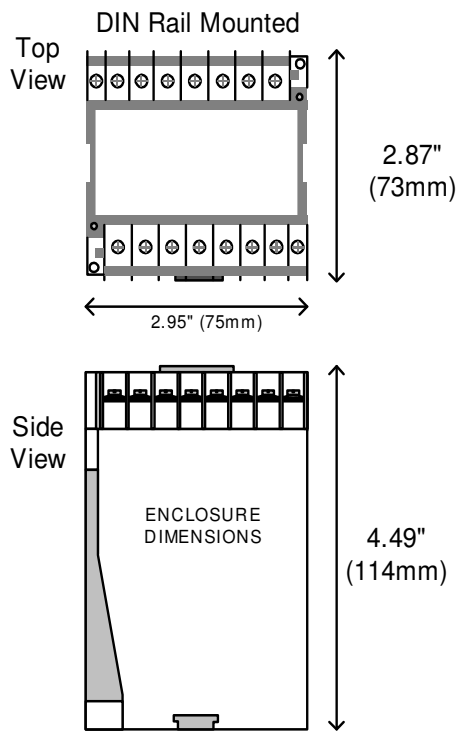

Figure 2

INITIAL CHECKING
The system can be checked at this point as follows:

a.) Check that the sensor is clear and all wiring is correctly connected. **A jumper must be present between terminals 12 and 13 if the monitor input is not used.**

b.) Apply power to the control unit. DO NOT APPLY POWER TO THE MPCE'S. THE POWER ON (RED), SENSOR CLEAR (AMBER) and OUTPUT ON (GREEN) indicators should be lit.

c.) Actuate the sensor. While holding the sensor in the actuated position the safety output relays should be heard de-energizing and the SENSOR CLEAR and OUTPUT ON indicators should go off. The SENSOR ACTIVATED (FLASHING RED) should be lit.

d.) Release the sensor (non-actuated). The safety output relays should be heard energizing. The SENSOR CLEAR and OUTPUT ON indicators should be lit. The SENSOR ACTIVATED should go off.

If the system operates as described above, the installation can be completed.

FOR THE OUTPUT CONTACT CONFIGURATION REFER TO FIGURE 3.

To configure the output contacts, remove the top cover to access the internal PC Board.

SAFETY OUTPUT 1
For normally open place jumper between D & E.
For normally closed place jumper between D & F.

SAFETY OUTPUT 2
For normally open place jumper between G & H.
For normally closed place jumper between G & I.

MONITOR OUTPUT
For normally open place jumper between A & B.
For normally closed place jumper between A & C.

For Regulated 24VDC
+ (24VDC) = 9 & E = 10 & - (0VDC) = 11

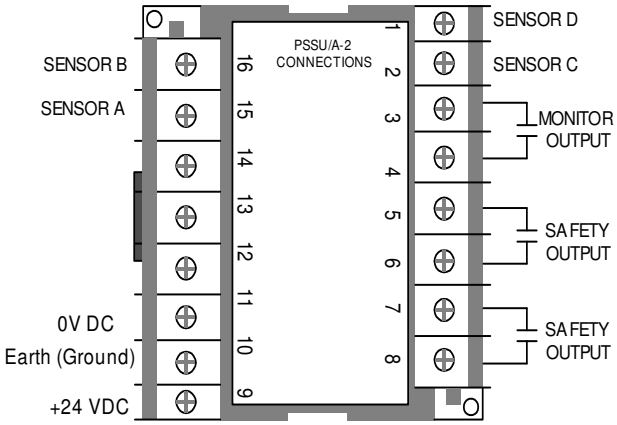

Figure 3

Table 2

SENSOR TYPE	SENSOR CONNECTION A	B	C	D
CKP and Armormats	Black	Red	Yellow	White
Mats, Edges, and Ribbon Switch	Black 1	White 1	Black 2	White 2
Any Edge or Ribbon Switch	Ribbed 1	Smooth 1	Ribbed 2	Smooth 2
PSSU/A Terminal Numbers	15	16	2	1

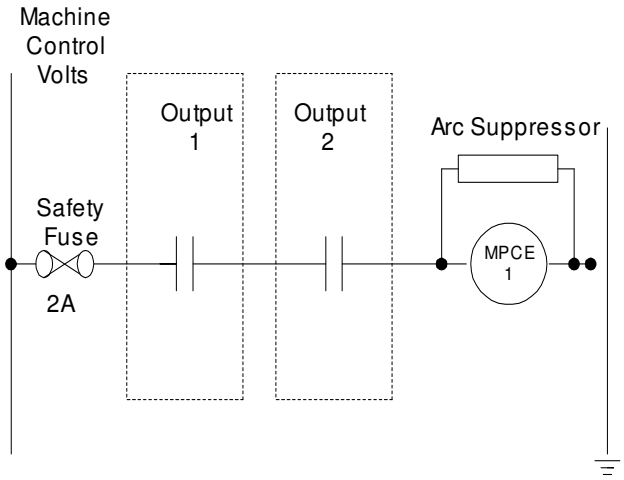

Figure 4 Safety Output Connection (single MPCE)

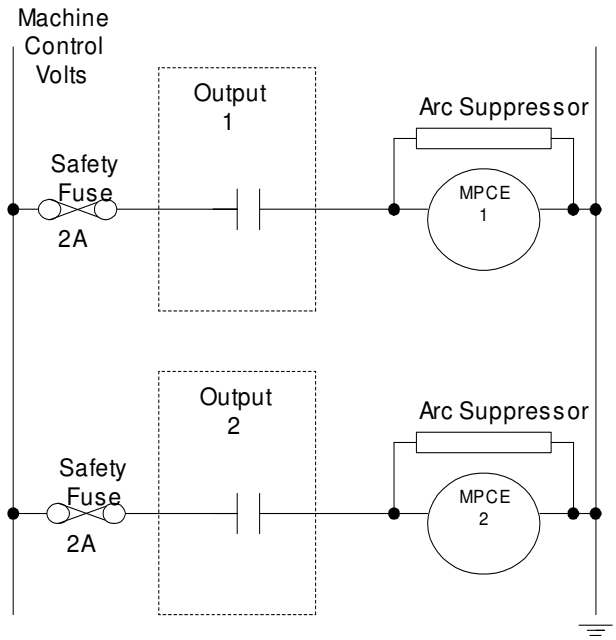

Figure 5 Safety Output Connection (two MPCE)

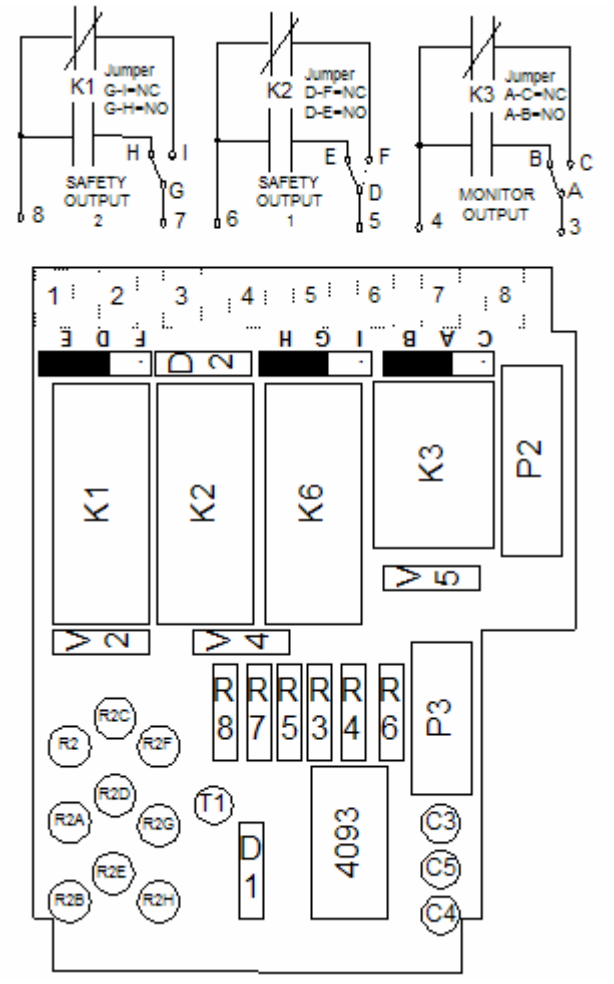

Figure 6

TECHNICAL SPECIFICATIONS

Specifications		Data	Tolerance
Supply Voltages		120 Vac 240 Vac 50/60 Hz	+/- 10%
Power Consumption		6 VA	
Safety Outputs	Type	Force Guided Contact	
	Contacts	2 Form C (NO) or (NC)	
	Ratings	2.0 A resistive load @ 240 Vac & 24 Vdc 0.75 A resistive load @ 50 Vdc 1.0 A inductive load @ 24 Vdc 0.35 A @ inductive load @ 50 Vdc	
	Switching Frequency	5 Hz	
	Response Time	10 ms	
	Fusing	2.0 A recommended, user-supplied	
Monitor Output	Device Type	Standard Relay	
	Contacts	1 Form C (NO) or (NC)	
	Contact Rating	5 A @ 240 Vac	
Operating Temperature		0 ºC to 50 ºC	
Enclosure Rating		IP20	
Enclosure Mounting		35 mm DIN Rail (7.5 mm deep)	
Connection Terminals	Type	Captive Terminals	
	Capacity	Two 2.5 mm sq. (AWG 12)	

INTERCONNECT DIAGRAMS, DAISY CHAINED/SERIES CONNECTION

Multiple Mats with 4 Conductor Standard Color Coded Lead Wire - Figure 7

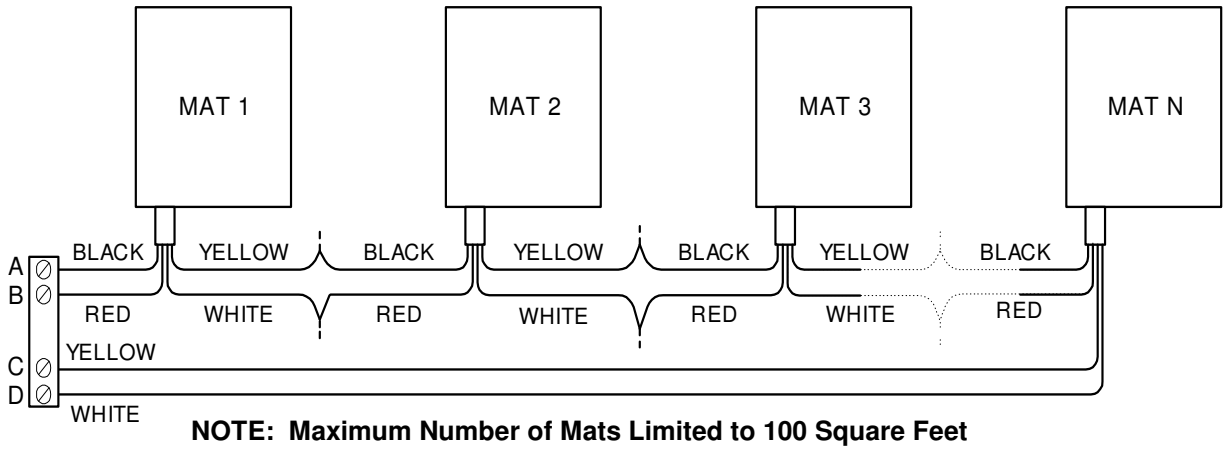

NOTE: Maximum Number of Mats Limited to 100 Square Feet

Multiple Mats with Optional 2 Conductor Standard Color Coded Lead Wire - Figure 8

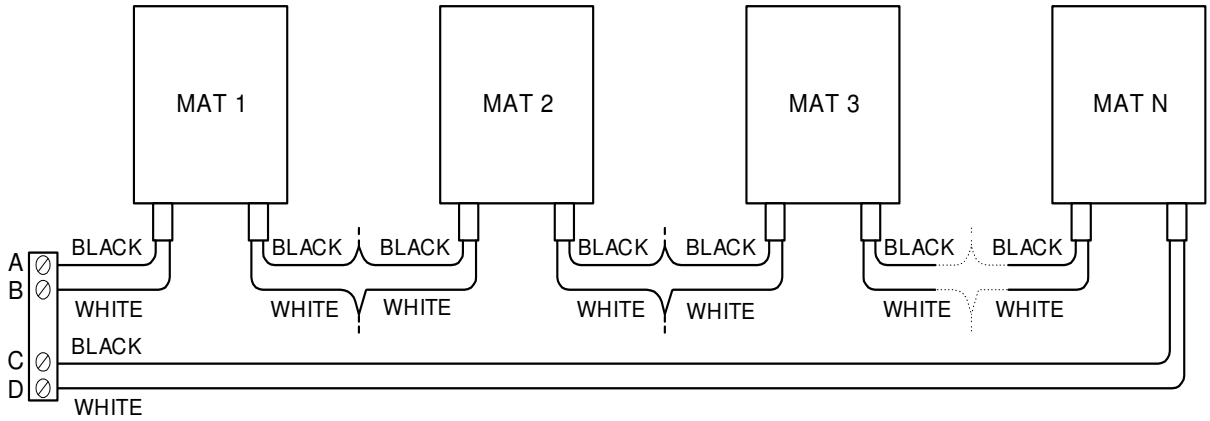

Multiple Sensing Edges, Bumpers and Ribbon Switches with Color Coded Wire - Figure 9

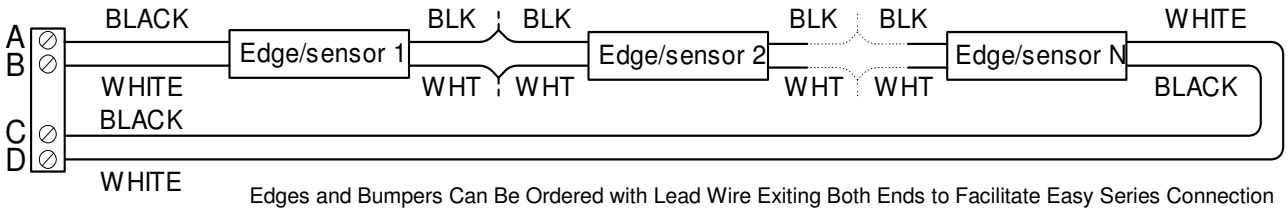

Edges and Bumpers Can Be Ordered with Lead Wire Exiting Both Ends to Facilitate Easy Series Connection

NOTE: Maximum Number of Edges, Bumpers, and Ribbon Switches Limited to 200 Feet
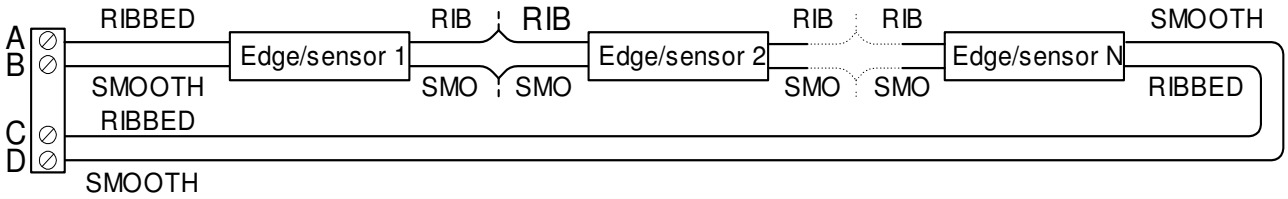
Multiple Sensing Edges, Bumpers and Ribbon Switches with Non-Color Coded Zip Cord Wire - Figure 10